MORIN

# Ductile Iron/Stainless Steel Cylinders
# Quarter-turn
# Spring Return and Double Acting Actuators
# Output Torques to 1,374,000 lb.in.

## Features and Benefits

- Ductile iron housing, piston and end caps provide long product life with durable, cost effective operation.
- Output shaft made of high strength alloy steel or 17-4PH stainless transmits torque without fatigue.
- Sintered bronze bushings or Teflon® composite on output shaft eliminate side loading of valve stem to maximize stem packing performance.
- Chrome-plated steel piston rod provides strength and corrosion resistance for enduring high cycle applications.
- Sintered bronze piston rod bushings provide low-friction support and precise alignment of the piston rod to increase efficiency, reduce maintenance and extend actuator life.
- Heat-treated stainless steel thrust pin and rollers transfer piston force to 17-4PH stainless steel or ductile iron yoke by rolling to reduce friction, for longer life and more efficient torque transmission.
- Teflon® guide bands ensure low-friction piston guidance during operation to protect cylinder walls from potential scoring and extend seal performance with a continuous cylinder wiping action.
- Bi-directional travel stops provide accurate valve rotation adjustment.
- ISO 5211 mounting pattern promotes easier valve adaptation by utilizing internationally recognized standards.
- Both Series B and C have been certified to SIL 3 ratings.

- Actuators are rated IP66.
- NAMUR drive slot on output shaft enables accessory-driven components to maintain a compact assembly and eliminates the need for couplings.
- Tectyl-coated springs can be disarmed without special tools to safely and easily disassemble the actuator in the field, reducing down time and providing a “man safe” spring.
- Easily removable housing cover provides effortless access for internal inspection of yoke mechanism.

## Technical Data

| | |
|---|---|
| Supply pressure: | 40 to 160 psig (see torque charts) |
| Supply medium: | Air or any gas compatible with materials of construction. |
| Temperature rating | |
| Standard range: | -20°F to 210°F |
| Optional range: | -65°F to 300°F |
| Angular rotation: | 90 degrees ± 8 degrees |

tyco Flow Control

Morin is either a trademark or registered trademark of Tyco International Services AG or its affiliates in the United States and/or other countries. All other brand names, product names, or trademarks belong to their respective holders.

Copyright © 2009 Tyco Flow Control. All rights reserved.

# Morin has a Rugged Heart

## Morin Scotch Yoke

The heart of any scotch yoke actuator is the yoke. Morin uses either 17-4PH or ductile iron for this critical area as standard.

The yoke is the mechanism used to convert linear force to torque. The yoke is critical to actuator performance. It must be rugged, yet precisely machined to give long life at high efficiency. Morin understands this and ensures that all our yoke designs meet this test.

## Principles of Construction

Using high quality materials of construction and modern rugged design concepts Morin becomes the standard for low cost valve actuation while providing high quality performance.

The actuator housings are all machined from ductile iron castings. This produces a rugged, low cost product through reduced machining time and by eliminating wasteful excess material.

Any components that rotate or slide during operation, such as the high strength output shaft, chrome-plated piston rod, stainless steel thrust pin or the ductile iron piston, are all supported by replaceable friction reducing bearings.

## Bi-directional Travel Stops

Adjustable stops on each end cap provide the flexibility of accurate valve rotation positioning at the end of the “open” and “close” stroke. Both stops are located on the cylinder centerline, the optimal position to maximize travel adjustment and eliminate any detrimental side loading on the travel stops. Adjustable from 82° to 98°.

## Spring Designed for Safety

All spring return models incorporate a “man safe” spring design that allows the actuator to be safely assembled and disassembled in the field without the need for special tools. The integral tie rods are bored and tapped to provide a means of loading and unloading the spring in a safe and convenient manner.

# Morin Understands Actuator Design

Morin understands that the most efficient design for one torque range is not the most efficient for another. Morin uses the standard scotch yoke design for lower torque ranges and a side bar design for the higher torque ranges.

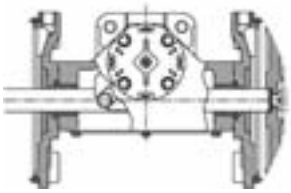

**Standard Design, Scotch Yoke**

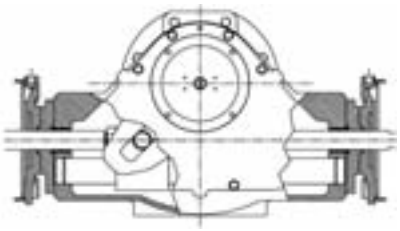

**Side Bar Design, Scotch Yoke**

Copyright © 2009 Tyco Flow Control. All rights reserved.

## Superior construction materials offer long life, and help deliver minimal downtime

### Series B or C, Models 135 to 1150

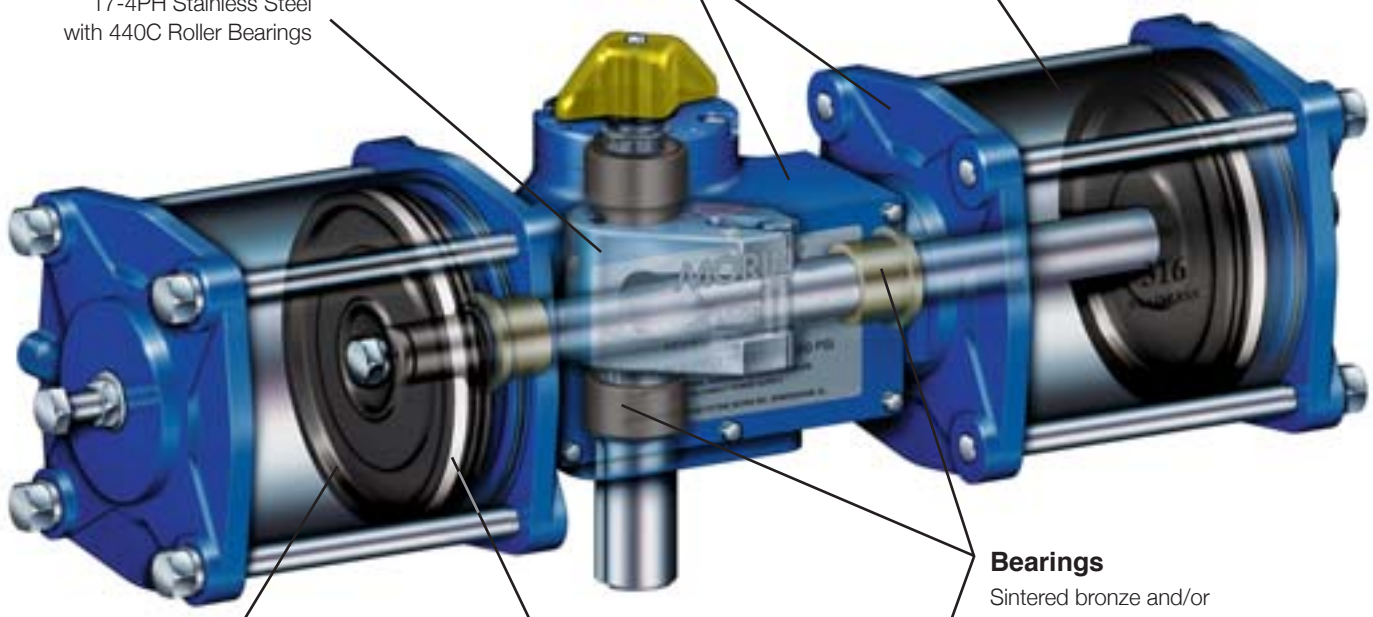


### Series B, Models 006 to 100

Morin Series B uses construction identical to the Series C, but with 316 Stainless Steel Cylinders.

Models 006 to 100 use 17-4PH output shaft as standard.

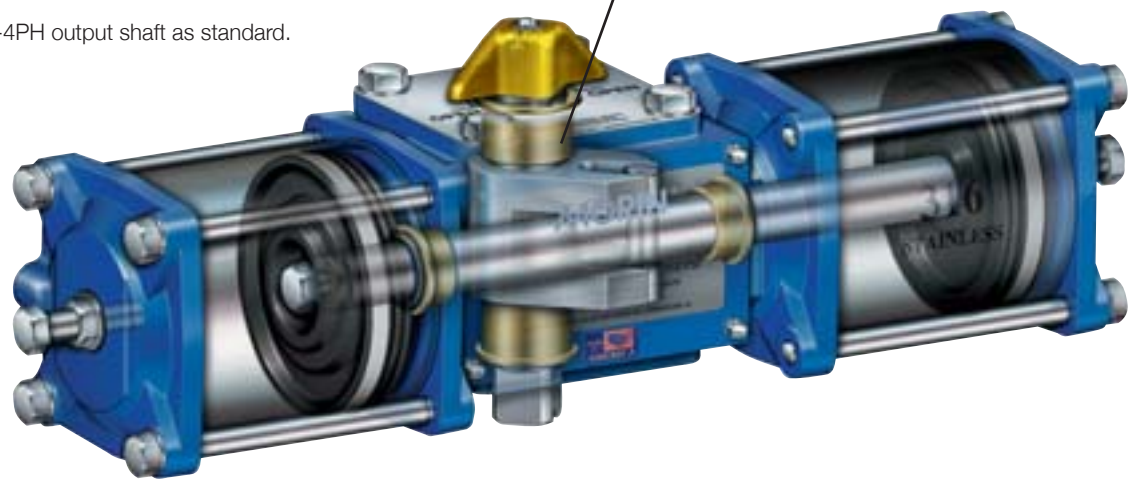

Note: See Morin Series B/C/S IOM for a complete bill of materials.

Copyright © 2009 Tyco Flow Control. All rights reserved.

## Superior Construction Materials Offer Long Life, and Help Deliver Minimal Downtime

### Series B or C, Models 135 to 1150

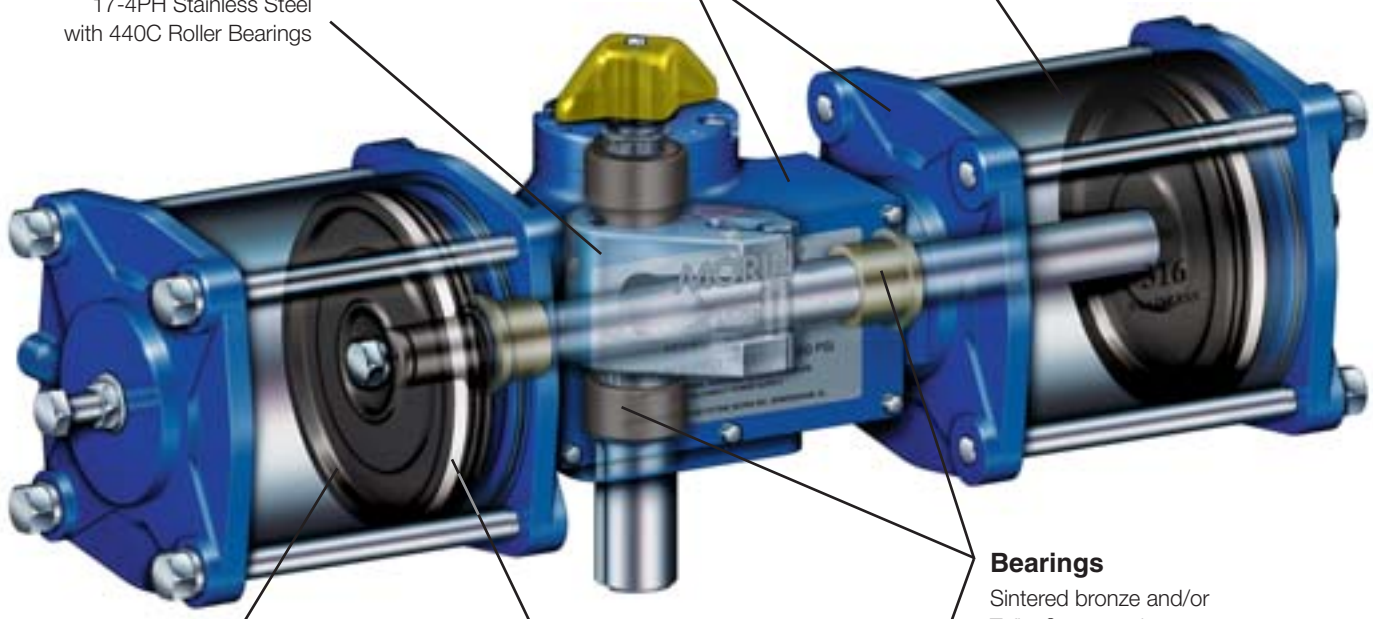


### Series B, Models 006 to 100

Morin Series B uses construction identical to the Series C, but with 316 Stainless Steel Cylinders.

Models 006 to 100 use 17-4PH output shaft as standard.

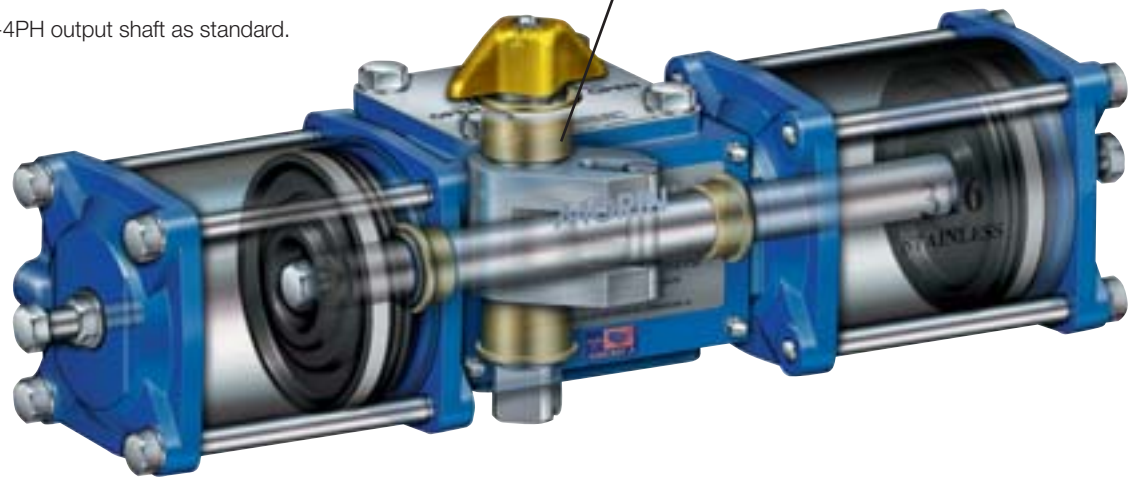

Note: See Morin Series B/C/S IOM for a complete bill of materials.

Copyright © 2009 Tyco Flow Control. All rights reserved.

## Symmetrical and Canted Yokes

**It's about fitting the torque curve of the actuator to the valve . . .**

**It's about lower cost, lighter weight, smaller actuators . . .**

**It's about choice . . .**

### Symmetric

Symmetrical Yoke design offers the standard torque curve seen most often in relation to scotch yoke actuators. It offers the increased torque advantage at both ends of the 90° stroke as shown on the blue curve below. This torque curve covers most quarter-turn applications.

### Canted

Canted Yoke design moves the torque curve to where it's needed most, gaining as much as 35% more break and reseat torque for the same size actuator. The canted yoke curve is shown in red below. Canted Yoke actuators allow selection of smaller, lighter, and less expensive actuator packages.

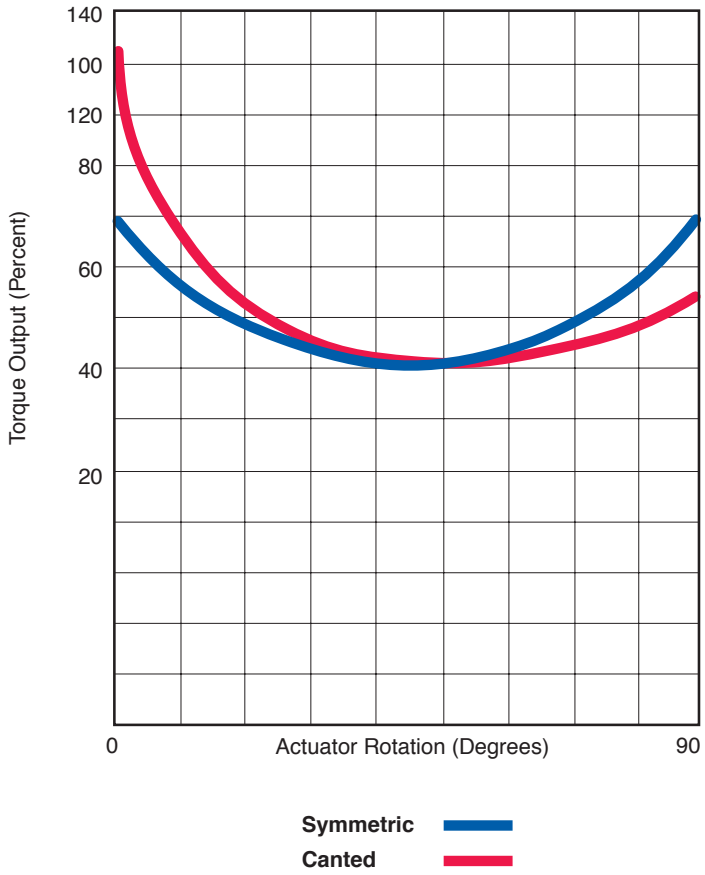


Copyright © 2009 Tyco Flow Control. All rights reserved.

## Options

To provide the actuation package best suited for your application, the Morin line offers a full range of manual accessories.

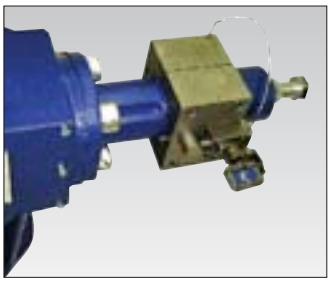

**Partial Stroke Test Device (PSTD)**

Provides a method of testing ESD packages without shutdown.

**Lockout**

Integral lockout allows safe shutdowns for maintenance and isolation of systems.

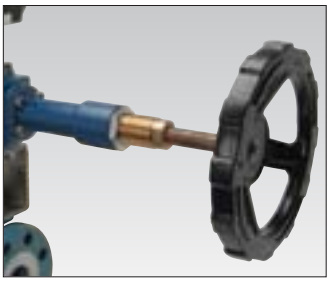

**Jackscrew Override (JSO)**

Manual operation when power is lost. Simple and effective.

**Hydraulic Override (MHP)**

Manual operation when power is lost. Includes speed controls.

**AWWA**

Tested per American Waterworks Association C504. Available for pneumatic or water service operation.

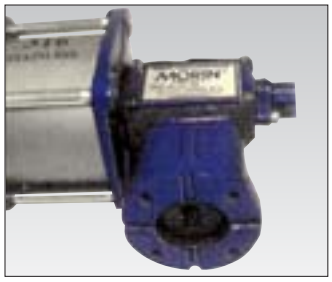

**Direct Mounting Cast Adapters**

Many valve top works covered, including some ISO mounting. Assures economic but correct mounting alignment.

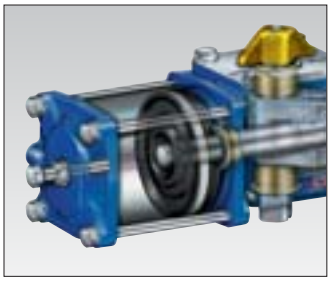

**Full Stroke Adjuster**

Provides mechanical control of maximum and/or minimum valve stroke.

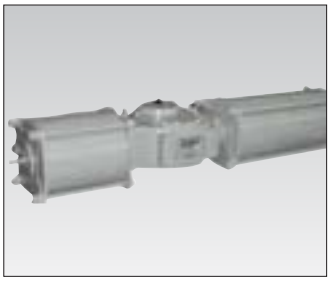

**Epoxy Painting (EX)**

Offshore rated, three-part coating system for high level of environmental protection.

**Proximity Switch Preparation**

Allows installation of cartridge style proximity switches. Leaves top works open for mounting of other devices.

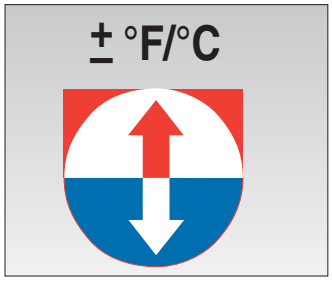


**High or Low Temperature Ratings**

Standard rating of -20°F to 210°F [-29°C to 99°C] covers most applications. Optional ratings down to -65°F [-54°C] and up to 300°F [149°C].

**Optional Certification for CE**

Manufactured in accordance with the Pressure Equipment Directive 97/23/EC and ATEX 94/9/EC.

Copyright © 2009 Tyco Flow Control. All rights reserved.

## Mechanical Data

| Actuator Model | Closing Torque @ 80 psig Symmetrical | Closing Torque @ 80 psig Canted | Number of Pistons | Cylinder Bore (inch) | Stroke (inch) | Volume[1] Cubic In 95° Stroke | Cycle Time[2] Seconds 90° Stroke | Weight (lbs.) |
|---|---|---|---|---|---|---|---|---|
| 006 | 600 | - | 1 | 2.750 | 2 | 14 | 0.5 | 11 |
| 015 | 1500 | - | 1 | 4.375 | 2 | 35 | 1 | 14 |
| 023 | 2300 | 2990 | 1 | 4.375 | 3 | 52 | 1 | 30 |
| 036 | 3960 | 5148 | 1 | 5.438 | 3 | 78 | 1.5 | 33 |
| 050 | 5000 | 6500 | 1 | 6.250 | 3 | 104 | 2.2 | 39 |
| 059 | 5900 | 7670 | 2 | 4.375/5.438 | 3 | 130 | 2.4 | 36 |
| 072 | 7920 | 9009 @ 70 psig | 2 | 5.438 | 3 | 156 | 2.5 | 41 |
| 100 | 10000 | 9750 @ 60 psig | 2 | 6.250 | 3 | 215 | 3 | 49 |
| 135 | 14175 | 18428 | 1 | 8.250 | 5 | 294 | 4.5 | 165 |
| 210 | 23100 | 30030 | 1 | 10.250 | 5 | 412 | 5 | 185 |
| 270 | 28350 | 36855 | 2 | 8.250 | 5 | 588 | 6 | 210 |
| 345 | 36225 | 41206 @ 70 psig | 2 | 8.250/10.250 | 5 | 706 | 7 | 234 |
| 370 | 37000 | 51469 | 1 | 12.250 | 6 | 780 | 8 | 390 |
| 420 | 42000 | 40950 @ 60 psig | 2 | 10.250 | 5 | 825 | 8.5 | 257 |
| 575 | 63825 | 82973 | 1 | 15.500 | 6 | 1132 | 9.5 | 519 |
| 740 | 77700 | 101010 | 2 | 12.250 | 6 | 1560 | 10 | 530 |
| 945 | 101115 | 98587 @ 60 psig | 2 | 12.250/15.500 | 6 | 1912 | 11 | 653 |
| 1150 | 120750 | 98110 @ 50 psig | 2 | 15.500 | 6 | 2263 | 12 | 775 |
| 1485 | 169523 | 247563 | 2 | 12.250 | 12 | 2986 | 20 | 1150 |
| 1935 | 221145 | 322950 | 2 | 12.250/15.500 | 12 | 3884 | 22 | 1250 |
| 2385 | 272767 | 398336 | 2 | 15.500 | 12 | 4781 | 24 | 1350 |
| 3071 | 347284 | 507157 | 2 | 19.250/15.500 | 12 | 5716 | 28 | 2055 |
| 3731 | 421874 | 616085 | 2 | 19.250 | 12 | 6944 | 31 | 2205 |
| 4534 | 512578 | 561408 @ 60 psig | 2 | 19.250/23.00 | 12 | 8436 | 35 | 2550 |
| 5336 | 603282 | 550627 @ 50 psig | 2 | 23.00 | 12 | 9929 | 39 | 2925 |
| 7114 | 793589 | 1099760 | 2 | 23.00 | 16 | 13238 | 50 | 4170 |

**Spring Return**

| | | | | | | | | |
|---|---|---|---|---|---|---|---|---|
| 006 | 221 | - | 1 | 2.750 | 2 | 14 | 0.5 | 13 |
| 015 | 525 | - | 1 | 4.375 | 2 | 35 | 1 | 20 |
| 023 | 800 | 1120 | 1 | 4.375 | 3 | 52 | 1 | 38 |
| 036 | 1260 | 1764 | 1 | 5.438 | 3 | 78 | 1.5 | 46 |
| 046 | 1600 | 2240 | 2 | 4.375 | 3 | 104 | 2 | 47 |
| 058 | 1600 | 2240 | 2 | 5.438/4.375 | 3 | 130 | 2.3 | 54 |
| 059 | 1890 | 2646 | 2 | 4.375/5.438 | 3 | 130 | 2.4 | 54 |
| 072 | 2500 | 3500 | 2 | 5.438 | 3 | 156 | 2.5 | 60 |
| 100 | 3500 | 4900 | 2 | 6.250 | 3 | 215 | 3 | 68 |
| 135 | 5670 | 7938 | 1 | 8.250 | 5 | 294 | 4.5 | 210 |
| 210 | 8085 | 11319 | 1 | 10.250 | 5 | 412 | 5 | 235 |
| 270 | 10395 | 14553 | 2 | 8.250 | 5 | 588 | 6 | 250 |
| 344 | 12637 | 17692 | 2 | 10.250/8.250 | 5 | 706 | 7 | 315 |
| 345 | 13760 | 19264 | 2 | 8.250/10.250 | 5 | 706 | 7 | 315 |
| 370 | 14893 | 20850 | 1 | 12.250 | 6 | 780 | 8 | 540 |
| 420 | 15435 | 21609 | 2 | 10.250 | 5 | 825 | 8.5 | 379 |
| 575 | 21131 | 29583 | 1 | 15.500 | 6 | 1132 | 9.5 | 779 |
| 740 | 29785 | 41699 | 2 | 12.250 | 6 | 1560 | 10 | 660 |
| 944 | 27713 | 38798 | 2 | 15.500/12.250 | 6 | 1912 | 11 | 871 |
| 945 | 32303 | 45224 | 2 | 12.250/15.500 | 6 | 1912 | 11 | 871 |
| 1150 | 42263 | 59168 | 2 | 15.500 | 6 | 2263 | 12 | 1082 |
| 1485 | 59333 | 83066 | 2 | 12.250 | 12 | 2986 | 20 | 1950 |
| 1934 | 66750 | 103833 | 2 | 15.500/12.250 | 12 | 3884 | 22 | 2025 |
| 1935 | 71601 | 116849 | 2 | 12.250/15.500 | 12 | 3884 | 22 | 2095 |
| 2385 | 95469 | 133656 | 2 | 15.500 | 12 | 4781 | 24 | 2150 |
| 3071 | 119336 | 167070 | 2 | 19.250/15.500 | 12 | 5716 | 28 | 2475 |
| 3072 | 129199 | 180879 | 2 | 15.500/19.250 | 12 | 5716 | 28 | 2890 |
| 3731 | 147656 | 206718 | 2 | 19.250 | 12 | 6944 | 31 | 3115 |
| 4534 | 166113 | 232558 | 2 | 23.00/19.250 | 12 | 8436 | 35 | 3925 |
| 5336 | 211149 | 295608 | 2 | 23.00 | 12 | 9929 | 39 | 4425 |
| 6044 | 235995 | 330394 | 2 | 23.00/19.250 | 12 | 11248 | 44 | 6325 |
| 7114 | 277756 | 388859 | 2 | 23.00 | 16 | 13238 | 50 | 6950 |

### Notes:

1. Air Consumption:
   Cubic inches shown in chart represent actual free air volume in cylinder between piston and end cap when furthest apart. Air consumption will vary depending on supply pressure. To determine standard cubic feet per minute use the following formula:

SCFM =

$$\left(\frac{\text{Vol. in}^3}{1728}\right)\left(\frac{\text{Supply Air psig} + 14.7}{14.7}\right)\left(\text{Strokes/Minute}\right)$$

Example: Calculate SCFM for Model 023 double acting using 80 psig air supply and 5 strokes/minute.

SCFM =

$$\left(\frac{52}{1728}\right)\left(\frac{80 + 14.7}{14.7}\right)\left(5\right) \quad \text{SCFM} = 0.97$$

2. Cycle times shown represent average time to stroke 90 degrees using standard pilot valves and should be used as a guide only. Cycle times can be increased or decreased dramatically by using speed controls, oversized pilot valves or quick exhaust valves.

## How to Order

1. Double Acting (Symmetrical Yoke) example:
   Air supply: 80 psig
   Break/end torque: 23,100 lb.in.
   B-210U-D000
   B: Series
   210: Model number
   U: UNC mounting threads
   D: Double acting
   000: No spring
2. Spring Return (Symmetrical Yoke) example:
   Air supply: 80 psig
   End torque: 8085 lb.in.
   B-210U-S080
   B: Series
   210: Model number
   U: UNC mounting threads
   S: Spring return
   080: Spring set code
3. Double Acting (Canted Yoke) example:
   Air supply: 80 psig
   Break (CCW) torque: 31,185 lb.in.
   End (CW) torque: 30,030 lb.in.
   B-210UC-D000
   B: Series
   210: Model number
   U: UNC mounting threads
   C: Canted Yoke
   D: Double acting
   000: No spring
4. For all spring return models:
   - Use required torque to determine Spring Set Code.
   - All spring sets ending with '0' fail clockwise (40, 50, 60, etc.)
   - All spring sets ending with '1' fail counterclockwise (41, 51, 61, etc.)
   - All symmetrical yoke models between 006 and 100 may be mounted to fail clockwise or counterclockwise by "flipping" along the longitudinal axis.

Copyright © 2009 Tyco Flow Control. All rights reserved.

## Series B Dimensions

### Models 046, 058, 059, 072 and 100

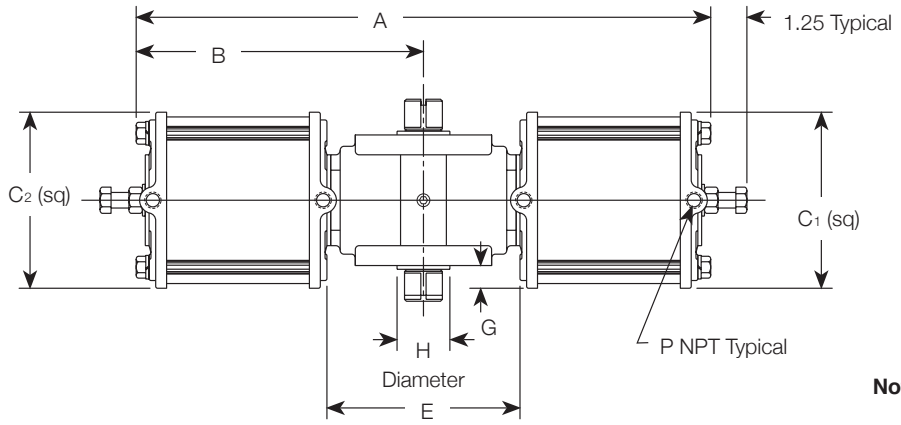


**Notes:** 1. Shown without pointer for clarity.
2. For mounting dimensions, refer to page 10.

### Models 006, 015, 023, 036 and 050

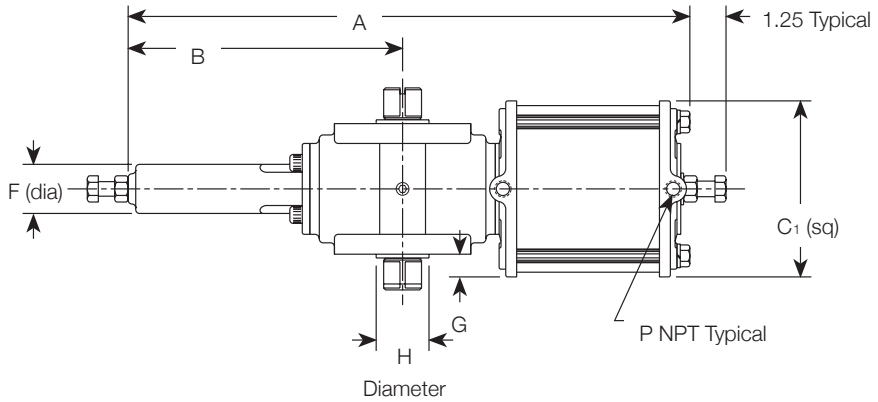


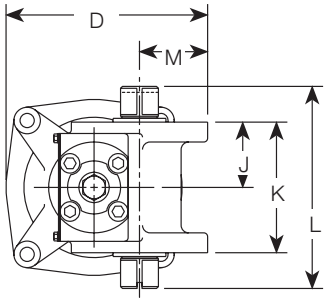


**Dimensions (inches), Double Acting**

| Model | A | B | C1 | C2 | D | E | F | G | H | J | K | L | M | P |
|---|---|---|---|---|---|---|---|---|---|---|---|---|---|---|
| 006DA | 12.87 | 5.28 | 3.18 | — | 3.87 | — | 1.09 | 0.18 | 1.50 | 1.50 | 3.00 | 4.75 | 1.31 | 1/8 |
| 015DA | 12.31 | 5.28 | 4.81 | — | 4.81 | — | 1.09 | 1.00 | 1.50 | 1.50 | 3.00 | 4.75 | 1.31 | 1/4 |
| 023DA | 18.54 | 8.88 | 4.81 | — | 6.16 | — | 1.75 | 0.25 | 1.75 | 2.16 | 4.31 | 6.69 | 2.25 | 1/4 |
| 036DA | 18.60 | 8.88 | 5.81 | — | 6.66 | — | 1.75 | 0.75 | 1.75 | 2.16 | 4.31 | 6.69 | 2.25 | 1/4 |
| 050DA | 18.55 | 8.88 | 7.12 | — | 7.31 | — | 1.75 | 1.38 | 1.75 | 2.16 | 4.31 | 6.69 | 2.25 | 1/4 |
| 059DA | 19.40 | 9.66 | 4.81 | 5.81 | 6.66 | 6.34 | — | 0.75 | 1.75 | 2.16 | 4.31 | 6.69 | 2.25 | 1/4 |
| 072DA | 19.35 | 9.68 | 5.81 | 5.81 | 6.66 | 6.38 | — | 0.75 | 1.75 | 2.16 | 4.31 | 6.69 | 2.25 | 1/4 |
| 100DA | 18.98 | 9.68 | 7.12 | 7.12 | 7.31 | 6.38 | — | 1.38 | 1.75 | 2.16 | 4.31 | 6.69 | 2.25 | 1/4 |

**Dimensions (inches), Spring Return**

| Model | A | B | C1 | C2 | D | E | F | G | H | J | K | L | M | P |
|---|---|---|---|---|---|---|---|---|---|---|---|---|---|---|
| 006SR | 12.87 | 5.28 | 3.18 | — | 3.87 | — | 1.09 | 0.18 | 1.50 | 1.50 | 3.00 | 4.75 | 1.31 | 1/8 |
| 015SR | 14.50 | 5.28 | 4.81 | — | 4.81 | — | 1.09 | 1.00 | 1.50 | 1.50 | 3.00 | 4.75 | 1.31 | 1/4 |
| 023SR | 21.95 | 8.88 | 4.81 | — | 6.16 | — | 1.75 | 0.25 | 1.75 | 2.16 | 4.31 | 6.69 | 2.25 | 1/4 |
| 036SR | 23.65 | 8.88 | 5.81 | — | 6.66 | — | 1.75 | 0.75 | 1.75 | 2.16 | 4.31 | 6.69 | 2.25 | 1/4 |
| 046SR | 22.73 | 9.66 | 4.81 | 4.81 | 6.16 | 5.58 | — | 0.25 | 1.75 | 2.16 | 4.31 | 6.69 | 2.25 | 1/4 |
| 058SR | 22.79 | 9.73 | 5.81 | 4.81 | 6.66 | 5.58 | — | 0.75 | 1.75 | 2.16 | 4.31 | 6.69 | 2.25 | 1/4 |
| 059SR | 24.44 | 9.66 | 4.81 | 5.81 | 6.66 | 5.44 | — | 0.75 | 1.75 | 2.16 | 4.31 | 6.69 | 2.25 | 1/4 |
| 072SR | 24.45 | 9.68 | 5.81 | 5.81 | 6.66 | 5.44 | — | 0.75 | 1.75 | 2.16 | 4.31 | 6.69 | 2.25 | 1/4 |
| 100SR | 24.51 | 9.73 | 7.12 | 7.12 | 7.31 | 5.44 | — | 1.38 | 1.75 | 2.16 | 4.31 | 6.69 | 2.25 | 1/4 |

Copyright © 2009 Tyco Flow Control. All rights reserved.

## Series B and C Dimensions

### Models 270, 344, 345, 420, 740, 944, 945 and 1150

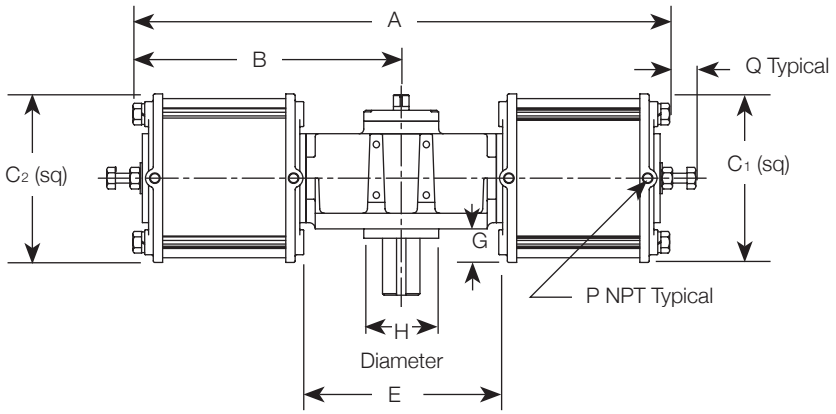


### Models 135, 210, 370 and 575

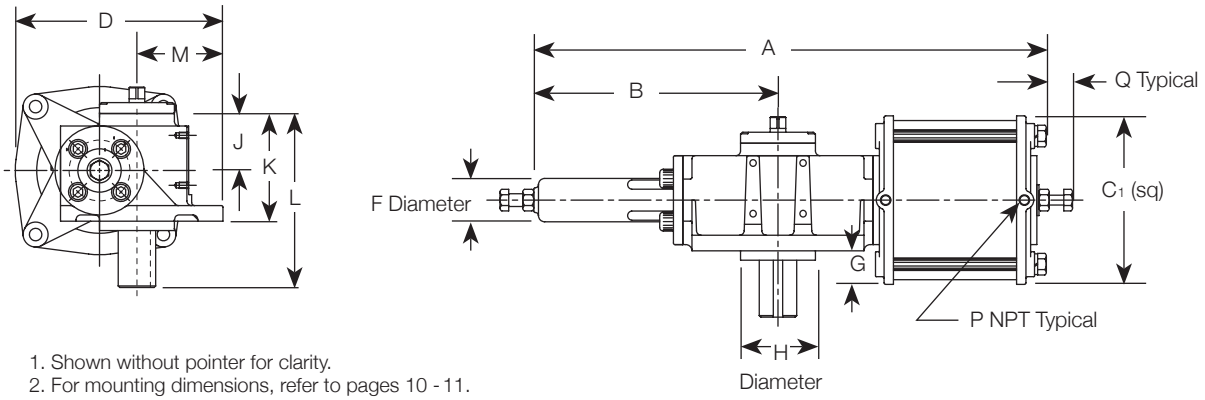


**Notes:** 1. Shown without pointer for clarity.
2. For mounting dimensions, refer to pages 10 - 11.

### Dimensions (inches), Double Acting

| Model | A | B | C1 | C2 | D | E | F | G | H | J | K | L | M | P | Q |
|---|---|---|---|---|---|---|---|---|---|---|---|---|---|---|---|
| 135DA | 32.74 | 15.88 | 9.50 | — | 10.44 | — | 2.75 | 1.00 | — | 4.38 | 8.13 | 11.82 | 3.19 | 3/8 | 1.75 |
| 210DA | 33.26 | 15.88 | 11.50 | — | 11.44 | — | 2.75 | 2.00 | — | 4.38 | 8.13 | 11.82 | 3.19 | 1/2 | 2.12 |
| 270DA | 33.77 | 16.89 | 9.50 | 9.50 | 10.44 | 11.72 | — | 1.00 | — | 4.38 | 8.13 | 11.82 | 3.19 | 3/8 | 1.75 |
| 345DA | 34.26 | 16.89 | 9.50 | 11.50 | 11.44 | 11.47 | — | 2.00 | — | 4.38 | 8.13 | 11.82 | 3.19 | 1/2 | 2.12 |
| 370DA | 41.64 | 19.56 | 13.50 | — | 16.75 | — | 3.50 | 2.69 | 5.90 | 5.44 | 9.50 | 14.81 | 6.88 | 1/2 | 1.75 |
| 420DA | 34.75 | 17.38 | 11.50 | 11.50 | 11.44 | 11.22 | — | 2.00 | — | 4.38 | 8.13 | 11.82 | 3.19 | 1/2 | 2.12 |
| 575DA | 42.26 | 19.56 | 17.00 | — | 18.50 | — | 3.50 | 4.44 | 5.90 | 5.44 | 9.50 | 14.81 | 6.88 | 3/4 | 2.50 |
| 740DA | 44.15 | 22.07 | 13.50 | 13.50 | 16.75 | 15.62 | — | 2.69 | 5.90 | 5.44 | 9.50 | 14.81 | 6.88 | 1/2 | 1.75 |
| 945DA | 44.77 | 22.07 | 13.50 | 17.00 | 18.50 | 15.25 | — | 4.44 | 5.90 | 5.44 | 9.50 | 14.81 | 6.88 | 3/4 | 2.50 |
| 1150DA | 45.39 | 22.69 | 17.00 | 17.00 | 18.50 | 14.88 | — | 4.44 | 5.90 | 5.44 | 9.50 | 14.81 | 6.88 | 3/4 | 2.50 |

### Dimensions (inches), Spring Return

| Model | A | B | C1 | C2 | D | E | F | G | H | J | K | L | M | P | Q |
|---|---|---|---|---|---|---|---|---|---|---|---|---|---|---|---|
| 135SR | 39.46 | 15.88 | 9.50 | — | 10.44 | — | 2.75 | 1.00 | — | 4.38 | 8.13 | 11.82 | 3.19 | 3/8 | 1.75 |
| 210SR | 42.67 | 15.88 | 11.50 | — | 11.44 | — | 2.75 | 2.00 | — | 4.38 | 8.13 | 11.82 | 3.19 | 1/2 | 2.12 |
| 270SR | 40.57 | 16.99 | 9.50 | 9.50 | 10.44 | 10.95 | — | 1.00 | — | 4.38 | 8.13 | 11.82 | 3.19 | 3/8 | 1.75 |
| 344SR | 40.95 | 17.38 | 11.50 | 9.50 | 11.44 | 10.70 | — | 2.00 | — | 4.38 | 8.13 | 11.82 | 3.19 | 1/2 | 2.12 |
| 345SR | 43.79 | 16.99 | 9.50 | 11.50 | 11.44 | 10.61 | — | 2.00 | — | 4.38 | 8.13 | 11.82 | 3.19 | 1/2 | 2.12 |
| 370SR | 51.48 | 19.56 | 13.50 | — | 16.75 | — | 3.50 | 2.69 | 5.90 | 5.44 | 9.50 | 14.81 | 6.88 | 1/2 | 1.75 |
| 420SR | 44.17 | 17.38 | 11.50 | 11.50 | 11.44 | 10.36 | — | 2.00 | — | 4.38 | 8.13 | 11.82 | 3.19 | 1/2 | 2.12 |
| 575SR | 54.12 | 19.56 | 17.00 | — | 18.50 | — | 3.50 | 4.44 | 5.90 | 5.44 | 9.50 | 14.81 | 6.88 | 3/4 | 2.50 |
| 740SR | 53.99 | 22.07 | 13.50 | 13.50 | 16.75 | 14.75 | — | 2.69 | 5.90 | 5.44 | 9.50 | 14.81 | 6.88 | 1/2 | 1.75 |
| 944SR | 54.59 | 22.67 | 17.00 | 13.50 | 18.50 | 14.37 | — | 4.44 | 5.90 | 5.44 | 9.50 | 14.81 | 6.88 | 3/4 | 2.50 |
| 945SR | 56.63 | 22.07 | 13.50 | 17.00 | 18.50 | 14.16 | — | 4.44 | 5.90 | 5.44 | 9.50 | 14.81 | 6.88 | 3/4 | 2.50 |
| 1150SR | 57.22 | 22.69 | 17.00 | 17.00 | 18.50 | 13.79 | — | 4.44 | 5.90 | 5.44 | 9.50 | 14.81 | 6.88 | 3/4 | 2.50 |

Copyright © 2009 Tyco Flow Control. All rights reserved.

## Series B and C Dimensions

### Models 1485, 1934, 1935, 2385, 3071, 3072, 373, 4534, 5336, 6044 and 7114

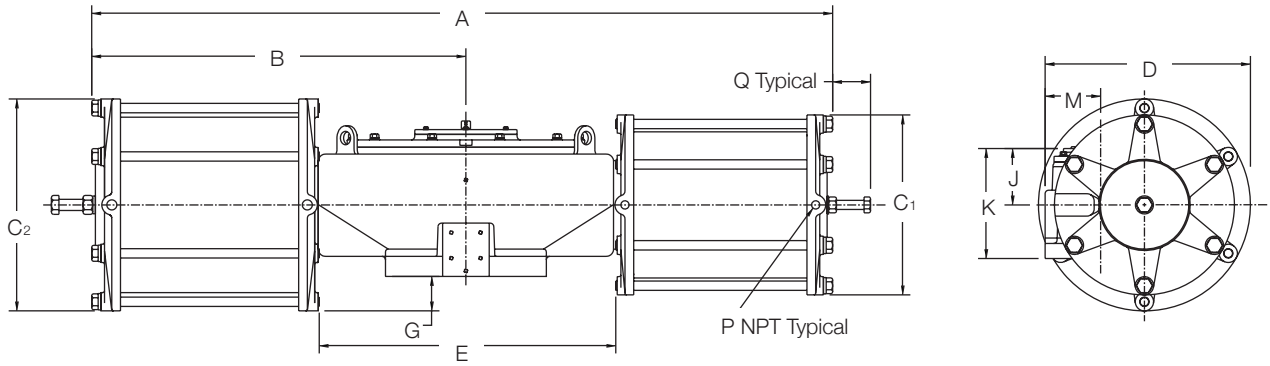


**Notes:** 1. Shown without pointer for clarity.
2. For mounting dimensions, refer to pages 10 - 11.

### Dimensions (inches), Double Acting

| Model | A | B | C1 | C2 | D | E | F | G | H | J | K | L | M | P | Q |
|---|---|---|---|---|---|---|---|---|---|---|---|---|---|---|---|
| 1485DA | 77.15 | 38.58 | 13.50 Sq. | 13.50 Sq. | 21.57 | 33.44 | — | 0.56 | — | 7.96 | 15.30 | — | 7.58 | 1/2 | 2.12 |
| 1935DA | 77.77 | 38.58 | 13.50 Sq. | 17.00 Sq. | 22.08 | 33.07 | — | 1.18 | — | 7.96 | 15.30 | — | 7.58 | 3/4 | 3.28 |
| 2385DA | 78.39 | 39.20 | 17.00 Sq. | 17.00 Sq. | 22.08 | 32.69 | — | 1.18 | — | 7.96 | 15.30 | — | 7.58 | 3/4 | 2.67 |
| 3071DA | 79.41 | 40.22 | 17.00 Sq. | 24.62 Dia. | 25.90 | 32.00 | — | 4.98 | — | 7.96 | 15.30 | — | 7.58 | 1 | 3.00 |
| 3731DA | 80.44 | 40.22 | 24.62 Dia. | 24.62 Dia. | 25.90 | 31.32 | — | 4.98 | — | 7.96 | 15.30 | — | 7.58 | 1 | 3.00 |
| 4534DA | 81.19 | 40.97 | 24.62 Dia. | 29.00 Dia. | 28.08 | 30.82 | — | 7.16 | — | 7.96 | 15.30 | — | 7.58 | 1 | 5.52 |
| 5336DA | 81.94 | 40.97 | 29.00 Dia. | 29.00 Dia. | 28.08 | 30.32 | — | 7.16 | — | 7.96 | 15.30 | — | 7.58 | 1 | 5.52 |
| 7114DA | 102.40 | 51.20 | 29.00 Dia. | 29.00 Dia. | 28.08 | 40.41 | — | 4.70 | — | 7.96 | 15.30 | — | 7.58 | 1 | 5.52 |

### Dimensions (inches), Spring Return

| Model | A | B | C1 | C2 | D | E | F | G | H | J | K | L | M | P | Q |
|---|---|---|---|---|---|---|---|---|---|---|---|---|---|---|---|
| 1485SR | 93.49 | 38.58 | 13.50 Sq. | 13.50 Sq. | 21.57 | 32.57 | — | 0.56 | — | 7.96 | 15.30 | — | 7.58 | 1/2 | 2.12 |
| 1934SR | 94.11 | 39.20 | 17.00 Sq. | 13.50 Sq. | 22.08 | 32.20 | — | 1.18 | — | 7.96 | 15.30 | — | 7.58 | 3/4 | 2.12 |
| 1935SR | 94.11 | 38.58 | 13.50 Sq. | 17.00 Sq. | 22.08 | 31.98 | — | 1.18 | — | 7.96 | 15.30 | — | 7.58 | 3/4 | 2.50 |
| 2385SR | 94.70 | 39.20 | 17.00 Sq. | 17.00 Sq. | 22.08 | 31.61 | — | 1.18 | — | 7.96 | 15.30 | — | 7.58 | 3/4 | 2.50 |
| 3071SR | 95.72 | 40.22 | 24.62 Dia. | 17.00 Sq. | 25.90 | 30.92 | — | 4.98 | — | 7.96 | 15.30 | — | 7.58 | 1 | 3.33 |
| 3072SR | 100.40 | 39.20 | 17.00 Sq. | 24.62 Dia. | 25.90 | 30.95 | — | 4.98 | — | 7.96 | 15.30 | — | 7.58 | 1 | 4.71 |
| 3731SR | 101.43 | 40.22 | 24.62 Dia. | 24.62 Dia. | 25.90 | 30.27 | — | 4.98 | — | 7.96 | 15.30 | — | 7.58 | 1 | 4.71 |
| 4534SR | 102.18 | 40.97 | 29.00 Dia. | 24.62 Dia. | 28.08 | 29.77 | — | 7.16 | — | 7.96 | 15.30 | — | 7.58 | 1 | 5.52 |
| 5336SR | 107.24 | 40.97 | 29.00 Dia. | 29.00 Dia. | 28.08 | 29.27 | — | 7.16 | — | 7.96 | 15.30 | — | 7.58 | 1 | 5.52 |
| 6044SR | 132.71 | 51.20 | 29.00 Dia. | 24.62 Dia. | 28.08 | 38.86 | — | 4.70 | — | 7.96 | 15.30 | — | 7.58 | 1 | 4.71 |
| 7114SR | 138.41 | 51.20 | 29.00 Dia. | 29.00 Dia. | 28.08 | 39.15 | — | 4.70 | — | 7.96 | 15.30 | — | 7.58 | 1 | 5.52 |

Copyright © 2009 Tyco Flow Control. All rights reserved.

## Series B and C Mounting Details

### Models 006 and 015 - Top and bottom of housing (symmetrical) ISO 5211-F07

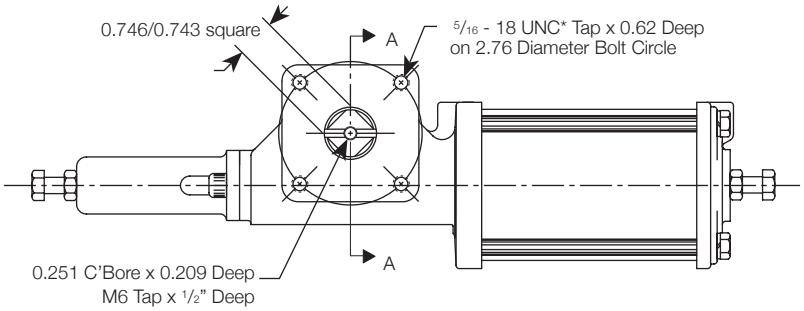


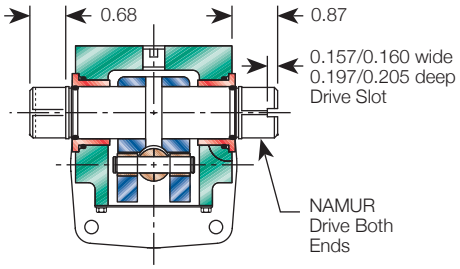


Section A - A

### Models 023 through 100 - Top and bottom of housing (symmetrical) ISO 5211-F12

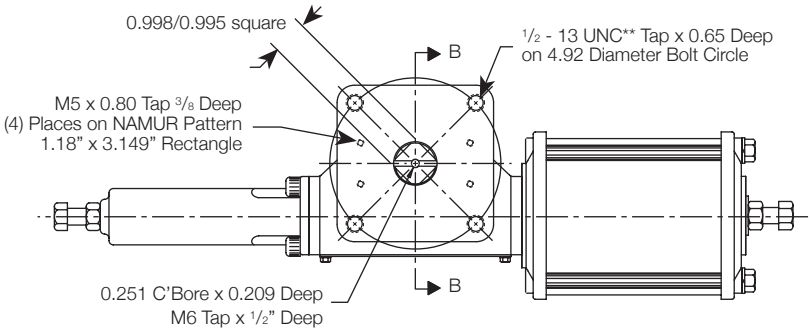


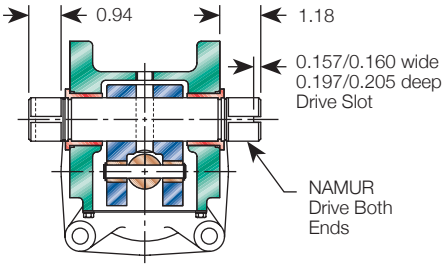


Section B - B

### Models 135, 210, 270, 344, 345 and 420 - Bottom of housing ISO 5211-F16

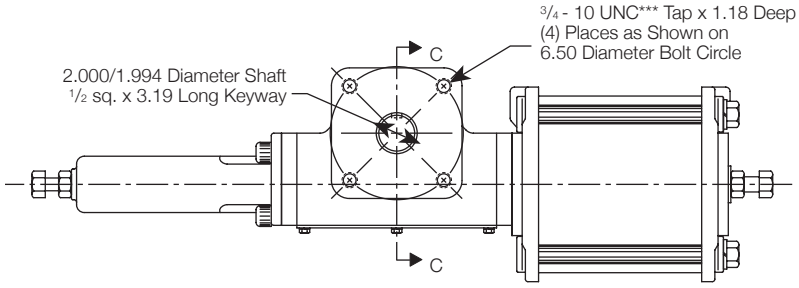


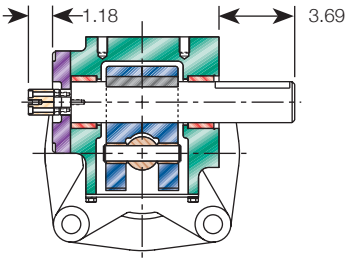


Section C - C

### Models 135, 210, 270, 344, 345 and 420 - Top of housing - Mounting details

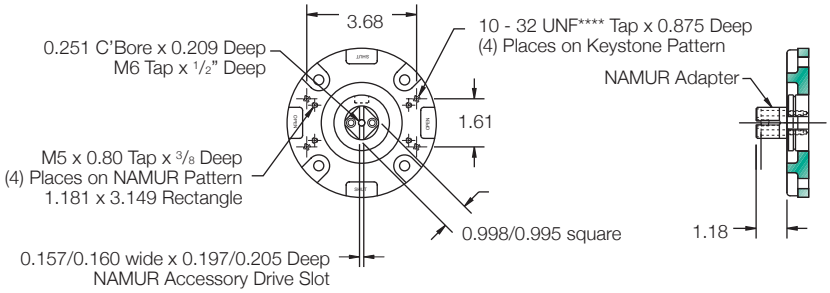


**Metric thread option**

| Metric Tap | Model Number |
|---|---|
| *M8 | 006 and 015 |
| **M12 | 023 to 100 |
| ***M20 | 135 to 1150 |
| ****M5 | 135 to 1150 |

Replace 'U' with 'M' in order number designation (refer to page 6).

Copyright © 2009 Tyco Flow Control. All rights reserved.

## Series B and C Mounting Details

### Models 370, 575, 740, 944, 945 and 1150 - Bottom of housing ISO 5211-F30

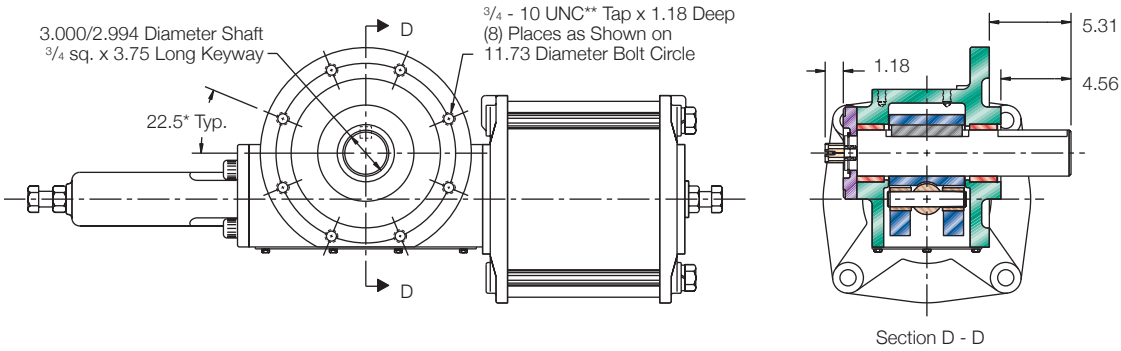


### Models 370, 575, 740, 944, 945 and 1150 - Top of housing - Mounting details

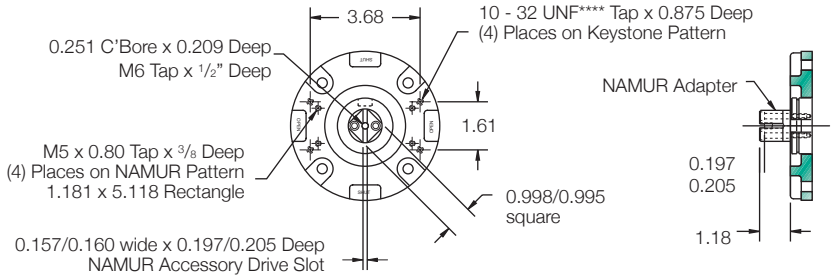


### Models 1485, 1934, 1935, 2385, 3071, 3072, 3731, 4534 and 5336 - Bottom of housing ISO 5211-F35

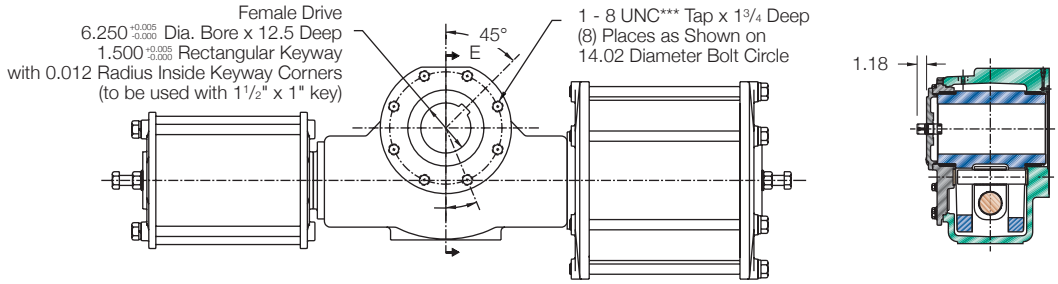


### Models 6044 and 7114 - Bottom of housing ISO 5211-F35

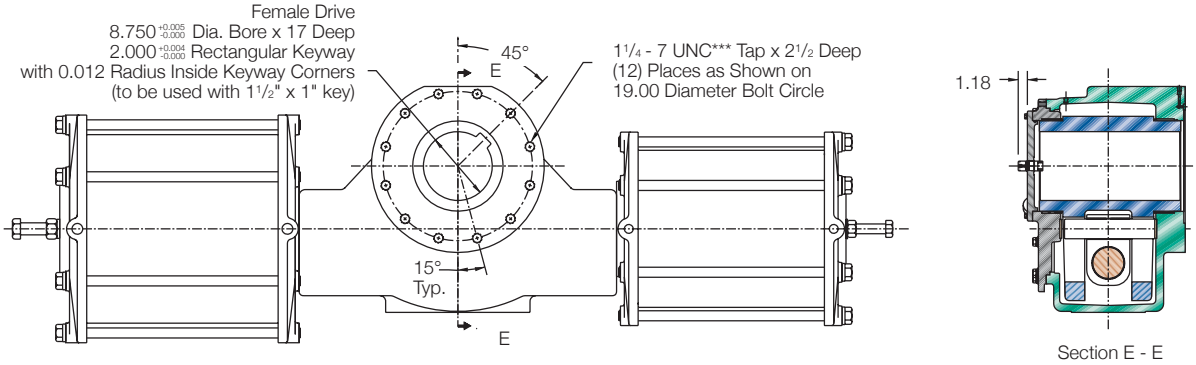


### Models 1485, 1934, 1935, 2385, 3071, 3072, 3731, 4534, 5336, 6044 and 7114 - Top of housing - mounting details

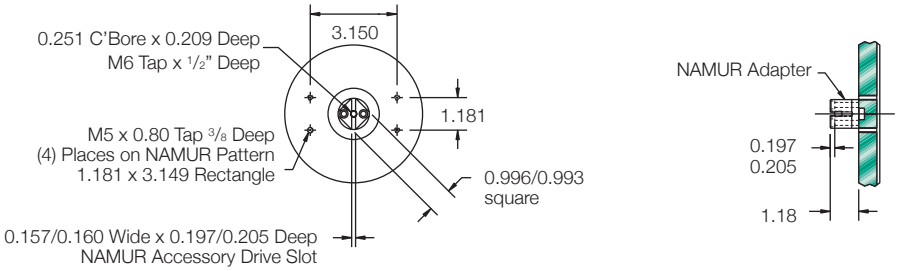


#### Metric thread option

| Metric Tap | Model Number |
|---|---|
| **M20 | 370 and 575 to 1150 |
| ***M30 | 1485 to 7114 |
| ****M5 | 370 and 575 to 1150 |

Replace 'U' with 'M' in order number designation (refer to page 6).

Copyright © 2009 Tyco Flow Control. All rights reserved.

## Also Available

### The Series S Actuator (All Stainless)

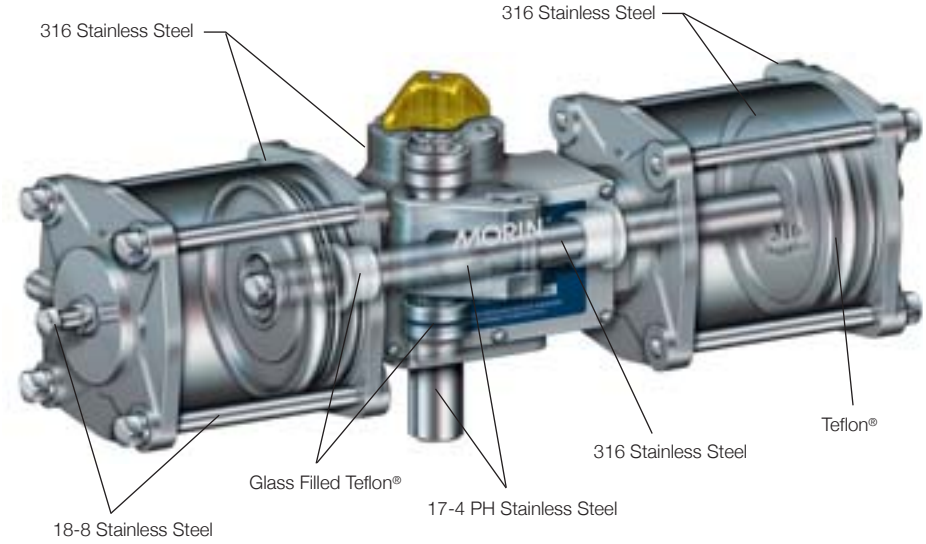


Setting an unrivaled standard in actuation at a price unexpectedly low for stainless steel.

- To 160 psig pressure rating.
- Double acting break torques to 240,000 lb.in.
- Spring end torques to 104,125 lb.in.

For additional information, refer to datasheet MORMC-0024.

### The Series B-HP Actuator

High pressure actuation with carbon steel cylinders for superior corrosion resistance.

- 1500 psig pressure rating.
- Double acting torques to 240,000 lb.in.
- Spring end torques to 104,125 lb.in.

For additional information, refer to datasheet MORMC-0072.

Tyco Flow Control (TFC) provides the information herein in good faith but makes no representation as to its comprehensiveness or accuracy. This data sheet is intended only as a guide to TFC products and services. Individuals using this data sheet must exercise their independent judgment in evaluating product selection and determining product appropriateness for their particular purpose and system requirements. TFC MAKES NO REPRESENTATIONS OR WARRANTIES, EITHER EXPRESS OR IMPLIED, INCLUDING WITHOUT LIMITATION ANY WARRANTIES OF MERCHANTABILITY OR FITNESS FOR A PARTICULAR PURPOSE WITH RESPECT TO THE INFORMATION SET FORTH HEREIN OR THE PRODUCT(S) TO WHICH THE INFORMATION REFERS. ACCORDINGLY, TFC WILL NOT BE RESPONSIBLE FOR DAMAGES (OF ANY KIND OR NATURE, INCLUDING INCIDENTAL, DIRECT, INDIRECT, OR CONSEQUENTIAL DAMAGES) RESULTING FROM THE USE OF OR RELIANCE UPON THIS INFORMATION. Patents and Patents Pending in the U.S. and foreign countries. Tyco reserves the right to change product designs and specifications without notice. All registered trademarks are the property of their respective owners. Printed in the USA.

Copyright © 2009 Tyco Flow Control. All rights reserved.